MATERIAL OF CONSTRUCTION		
NO.	**PART**	**STANDARD MATERIAL**
1	Frame	Cast Iron - ASTM A126 Class B
2	Cover	Cast Iron - ASTM A126 Class B
3	Seat	Neoprene - ASTM D2000
4	Hinge Pin	Stainless Steel - ASTM A276 Type 316
5	Cotter Pin	Stainless Steel Type 316
6	Washer	Stainless Steel Type 316

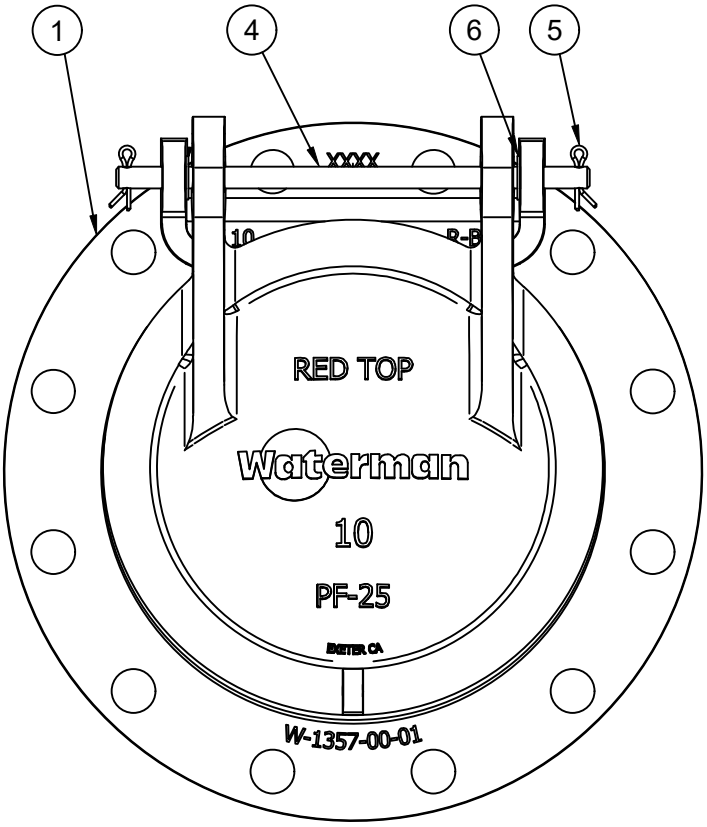

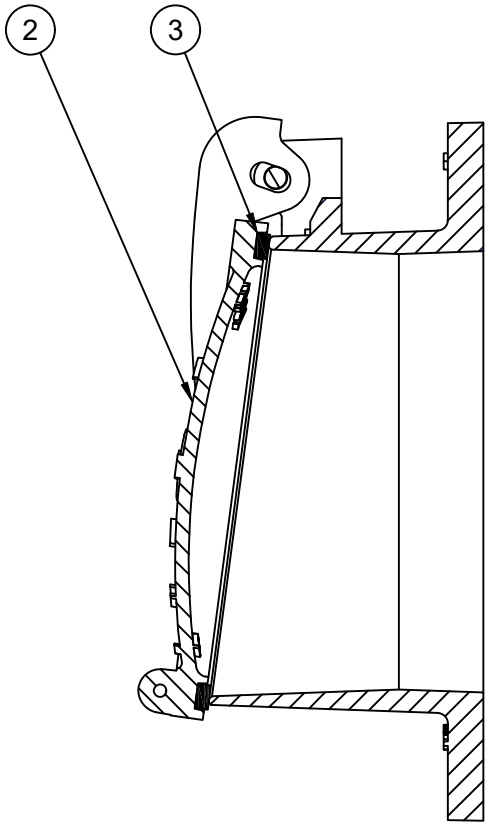

DESCRIPTION:	DATE:	DRAWING:
PF-25 F (Flange Mount) Cast Iron Flap Gate Materials of Construction	09/10/2026	FG-MC0002-A

MCWANE PLANT & INDUSTRIAL

McWane Plant & Industrial
25500 Road 204
Exeter, CA 93221

Waterman

Products and images depicted are for general illustrative purposes only and do not represent the complete scope of supply, configuration, or country of origin. Final product details are governed solely by McWane Plant & Industrial's standard Terms and Conditions of Sale.