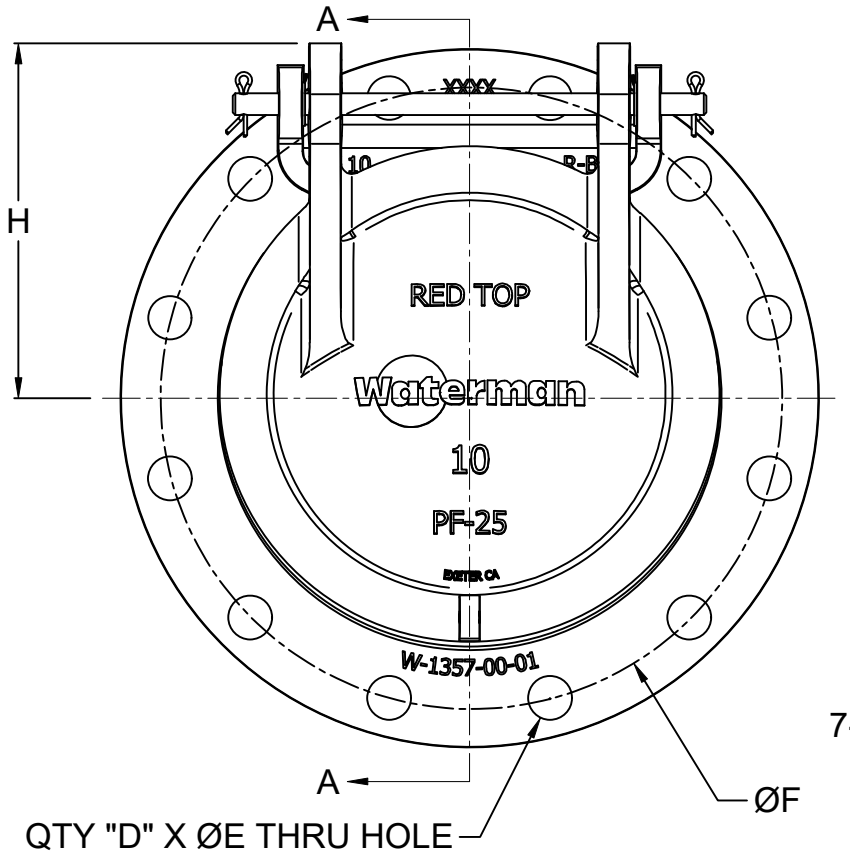

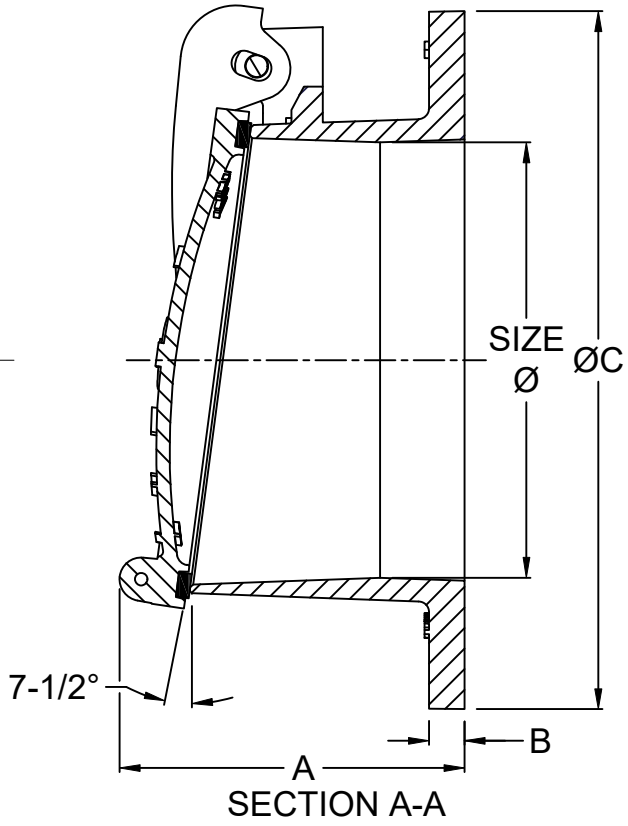

DIMENSIONS (Inches)									
Size	**Class**	**A**	**B**	**C**	**D**	**E**	**F**	**H**	**WT (lbs)**
4"	125 LB	6.50	0.75	9.00	8	3/4"	7.50	4.88	18.0
6"	25 LB	7.34	0.75	11.00	8	3/4"	9.50	6.03	29.0
	125 LB				8	7/8"			
8"	25 LB	7.63	0.75	13.50	8	3/4"	11.75	6.88	44.4
	125 LB				8	7/8"			
10"	25 LB	7.94	0.81	16.00	12	3/4"	14.25	8.13	58.0
	125 LB				12	1"			
12"	25 LB	9.19	1.13	18.88	12	3/4"	17.00	9.63	92.6
	125 LB				12	1"			
14"	25 LB	9.63	1.06	21.00	12	7/8"	18.75	10.44	117.0
	125 LB				12	1-1/8"			
16"	125 LB	9.94	1.00	23.50	16	1-1/8"	21.25	11.50	154.0
18"	25 LB	10.38	1.10	25.00	16	7/8"	22.75	12.25	178.0
	125 LB				16	1-1/4"			
20"	25 LB	10.44	1.25	27.50	20	7/8"	25.00	13.38	210.0
	125 LB				20	1-1/4"			
24"	125 LB	12.06	1.50	32.00	20	1-3/8"	29.50	15.50	315.0

DESCRIPTION:	DATE:	DRAWING:
PF-25 F (Flange Mount) Cast Iron Flap Gate Dimensional Drawing	09/10/2026	FG-DD0002-A

MCWANE PLANT & INDUSTRIAL

McWane Plant & Industrial
25500 Road 204
Exeter, CA 93221

Waterman

Products and images depicted are for general illustrative purposes only and do not represent the complete scope of supply, configuration, or country of origin. Final product details are governed solely by McWane Plant & Industrial's standard Terms and Conditions of Sale.